Sh

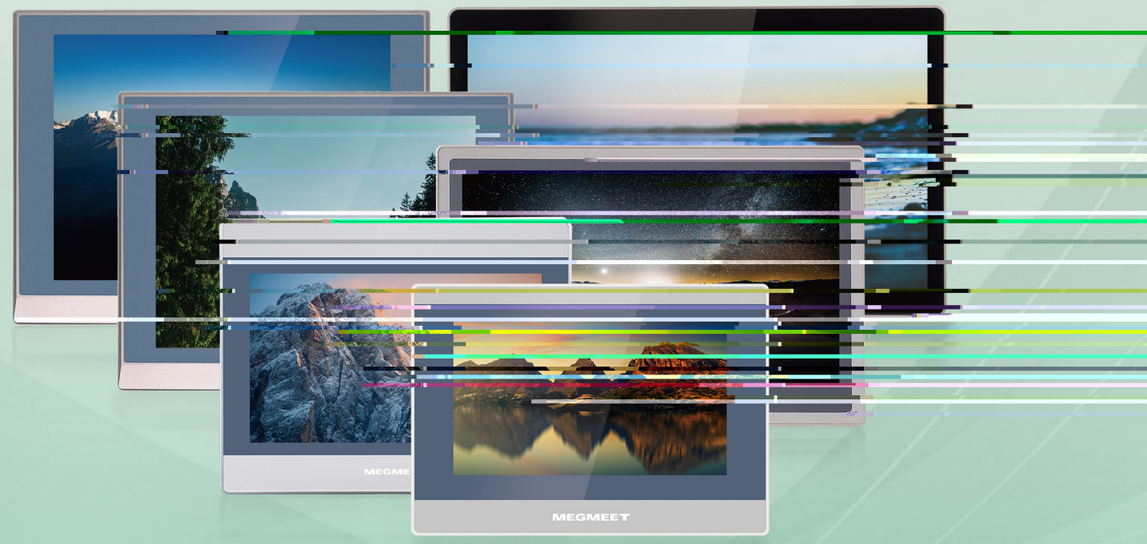

2800+ 7800+ 8

Content

Software Introduction ---------- P01

Product Specification ---------- P03

Dimensions ---------- P07

Model List ---------- P11

Picture			
Model/Series	MZ800-TT05SK30/31	MZ800-TT107SK30	MZ800-TT207SK30/31
Display size	4.3'' (16: 9 TFT LCD screen)	7'' (16: 9 TFT LCD screen)	7'' (16: 9 TFT LCD screen)
Resolution	480x272	800x480	1024x600
Display material		TFT color touch(LCD screen)	
Effective display size (T/B/L/R)	50'/70'/70'/70'	50'/70'/70'/70'	30: 50'/70'/70'/70' 31: 85'/85'/85'/85
Brightness	30: 360/31:300	250	30:360/31:450
Display color	24-bit color	16-bit color	24-bit color
Touch screen		4-wire industrial resistance touch screen	
CPU	600MHz ARM Cortex-A8	720MHz ARM	4-core 1.2GHz ARMCortex-A7
Memorizer	128MB Flash+128MB DDR3	64MB RAM+128MB Flash	128MB DDR3+4GB EMMC
RTC		Built-in real-time clock	
Ethernet	30: None 31: 10M/100M(Adaptive)	None	30: None 31: 1-CH 10M/100M(Adaptive)
SD card	None		30: None 31: Supported
USB port		One USB Slave 2.0; One USB Host 2.0	
Serial interface		COM1:RS232/RS485/RS422 COM3:RS232	
Rated power	<5W		<10W
Rated voltage		DC24V ranging from DC 9V to 28V	
Power supply protection		Lightning surge protection	
Power-lossing time		<5ms	
CE	Conform to EN61000-6-2:2005 EN61000-6-4:2007 standard; Conform to RoHS lightning surge±1KV group pulse±2KV; electrostatic contact 4KV air discharge 8KV		
Operation temperature	30:-20~50C/31:-25~75		0~50
Storage temperature	30:-25~60°C/31:-30~80		-20~60
Ambient humidity		10~90%RH (No condensation)	
Shake-resistance		10~25Hz(X Y Z direction 2G/30 min)	
Protection grade	The front panel conforms to IP65 (with [illegible]		

Dimensions of MZ800 Series HMI

MZ800-TT05SK30

MZ800-TT05SK31

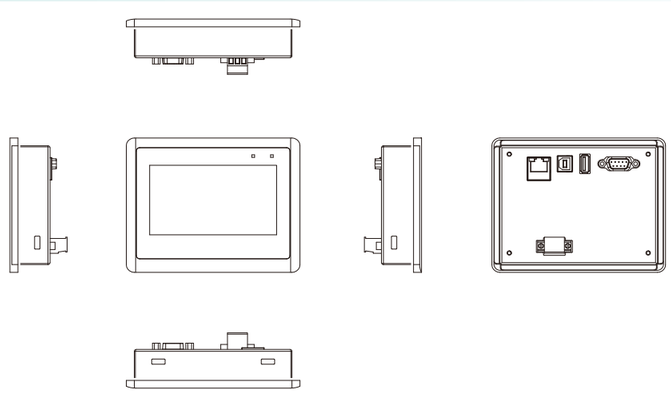

MZ800-TT107SK30

MZ800-TT207SK30/31

MZ800-TT207SK30/31W

MZ800-TT210SK30/31

00-T

-TT05/207/210SK30
-TT05/207/210SK31
800-TT10/12/15P
COM1&COM3

terminal male

1	→	RS485-/RS422 Rx(COM1)
2	→	RS232 Rx(COM1)
3	→	RS232 Tx(COM1)
4	→	RS422 Tx-(COM1)
5	→	GND
6	→	RS485+/RS422 Rx+(COM1)
7	→	RS232 Rx(COM3)
8	→	RS232 Tx(COM3)
9	→	RS422 Tx+(COM1)
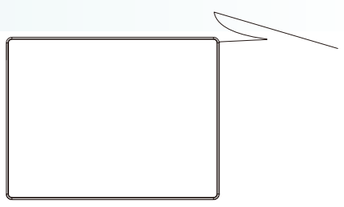
MZ600-TT210SK/SA